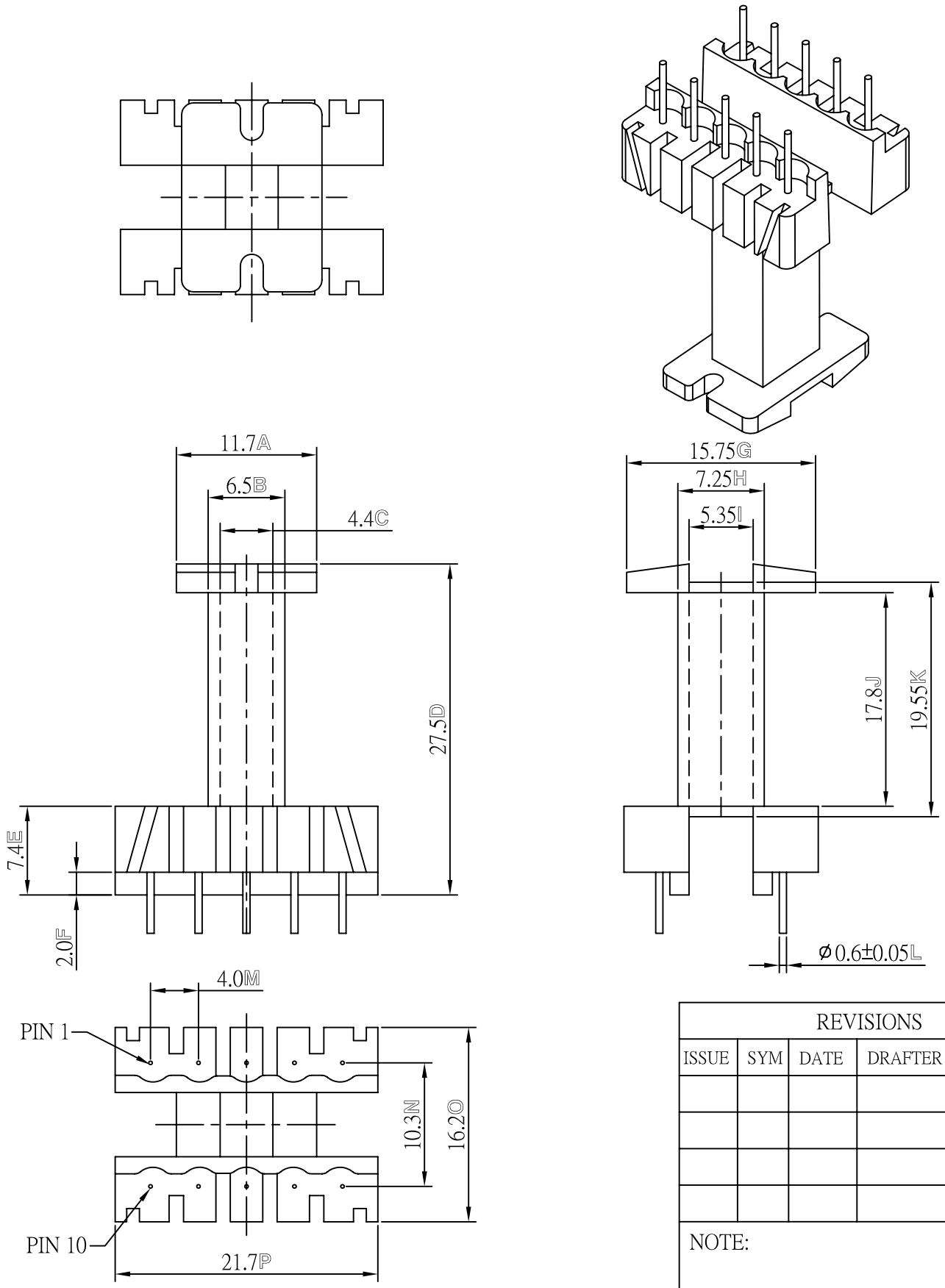

REVISIONS				
ISSUE	SYM	DATE	DRAFTER	CHECKER

NOTE:

樹林企業股份有限公司
TAIWAN SHULIN ENTERPRISE CO., LTD
WEB:www.bobbin.com.tw
e-mail:shulin@bobbin.com.tw
(TAIWAN TAIPEI) TEL:(886)2-2223-1500 FAX:(886)2-2222-4646
(CHINA DONGGUAN) TEL:(86)769-7730-785 FAX:(86)769-7312-387
(CHINA SUZHOU) TEL:(86)512-6621-0580 FAX:(86)512-6621-0685

MODEL	TF-1614		
MATERIAL	PHENOLIC		
UL RATING	UL94V-0	TOLERANCE	
PIN MATERIAL	CP WIRE	.X ±0.2 .XX ±0.15 PIN PITCH ±0.1	
EDITION	2.0		
DATE	2002/8/15		
SCALE	2/1	UNIT	MM